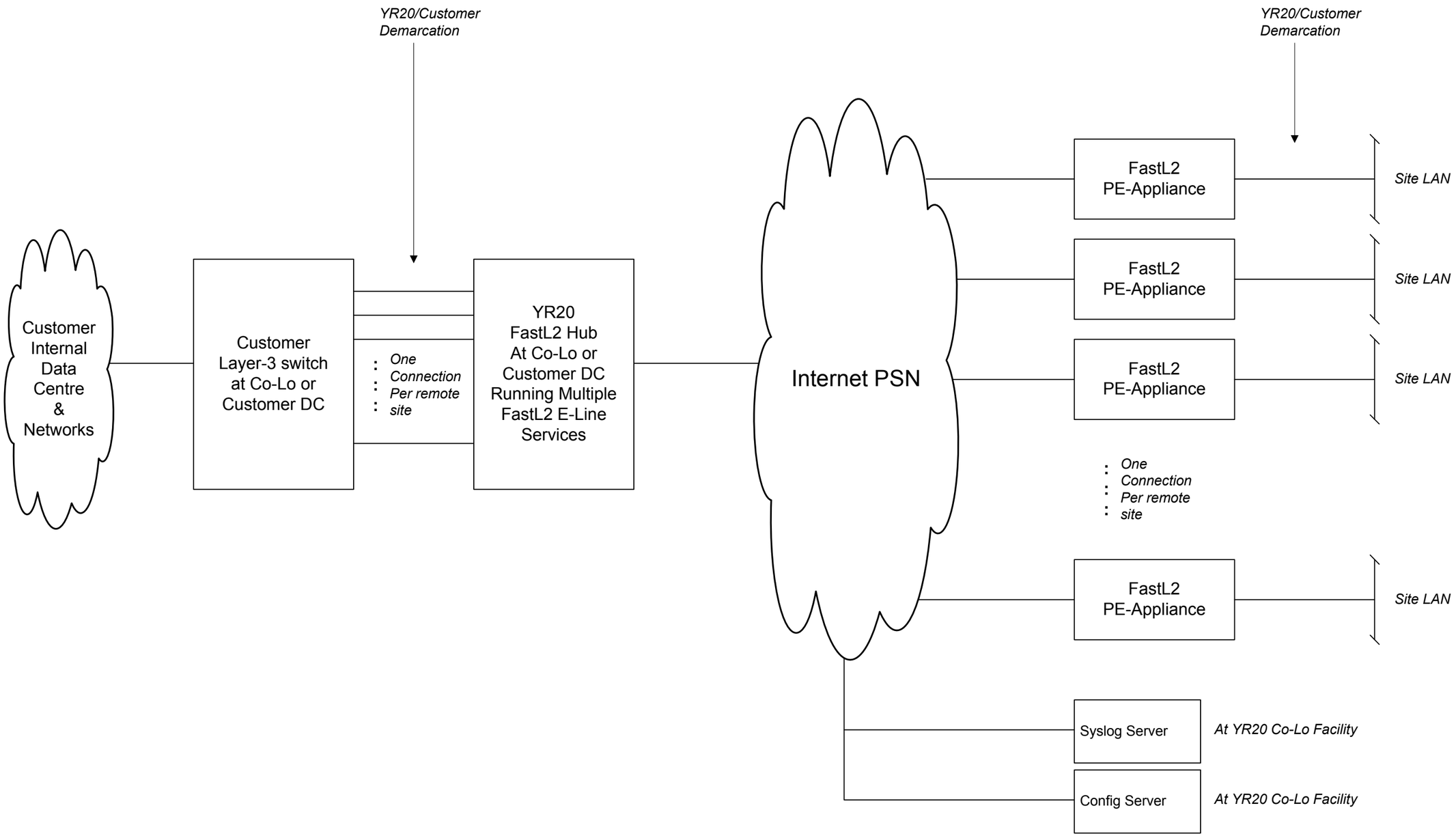

File Name: YR20-FastL2-Generic-E-Line-and-CollapsedCore-GA
File Location: ProjectLocker

Rev	Date	Status	Drw	Ckd	App
001	2011-02-11	DRAFT	TE		

YR20 (UK) Ltd
Westpoint House
Westhill
Aberdeen AB32 6FE

+44-1224-766646

Project: FastL2
Title:
FastL2 Generic E-Line and Collapsed Core GA
DRG No.
Rev 001